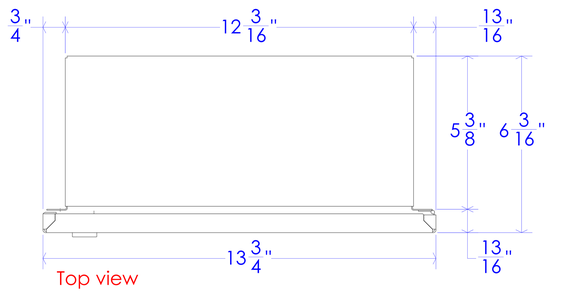

Top view

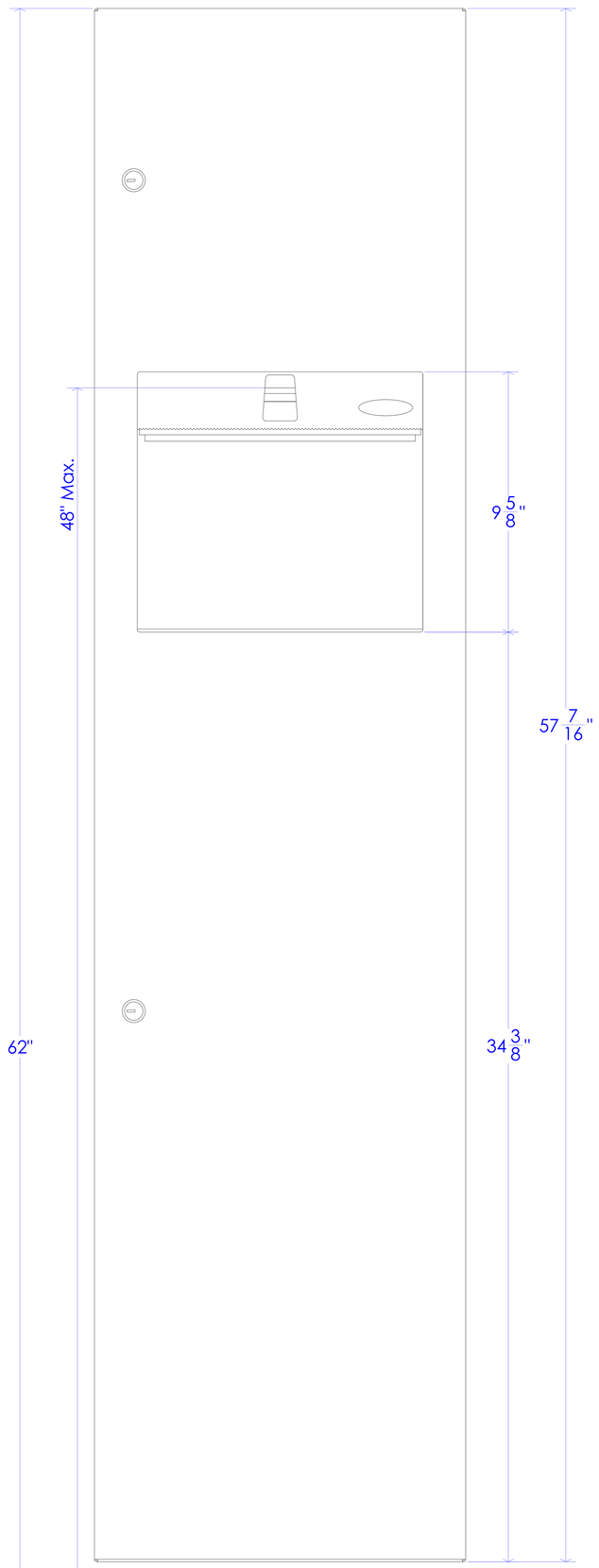

Front view

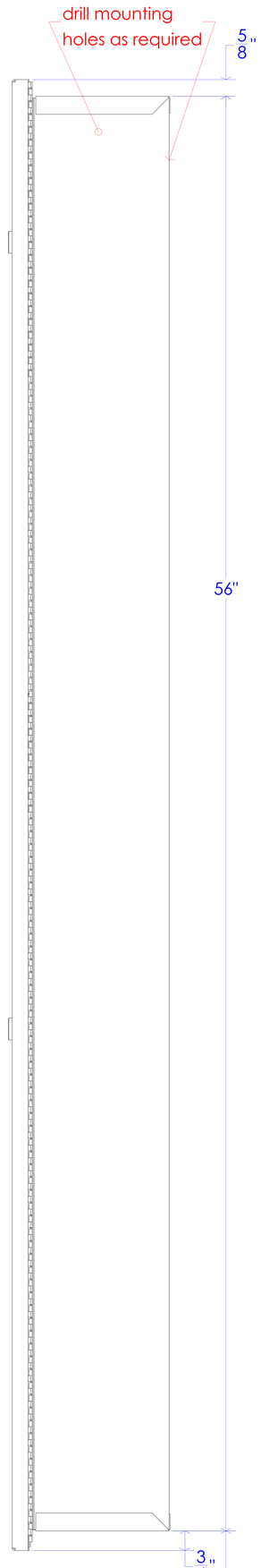

Side view
400-A

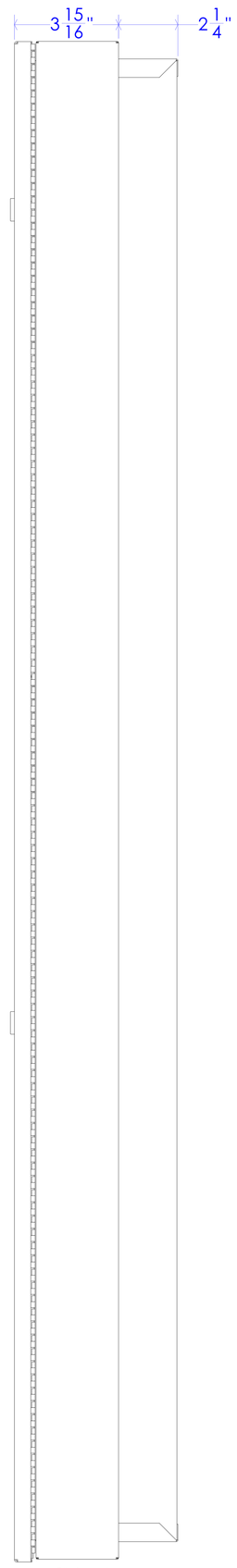

Side view
400-B Semi-recessed

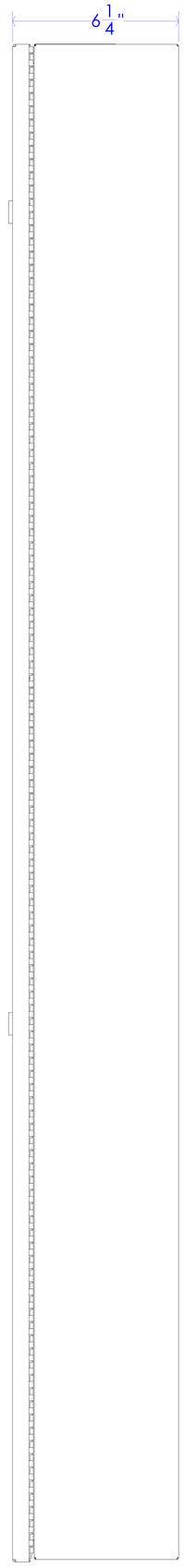

Side view
400-C Surface mount

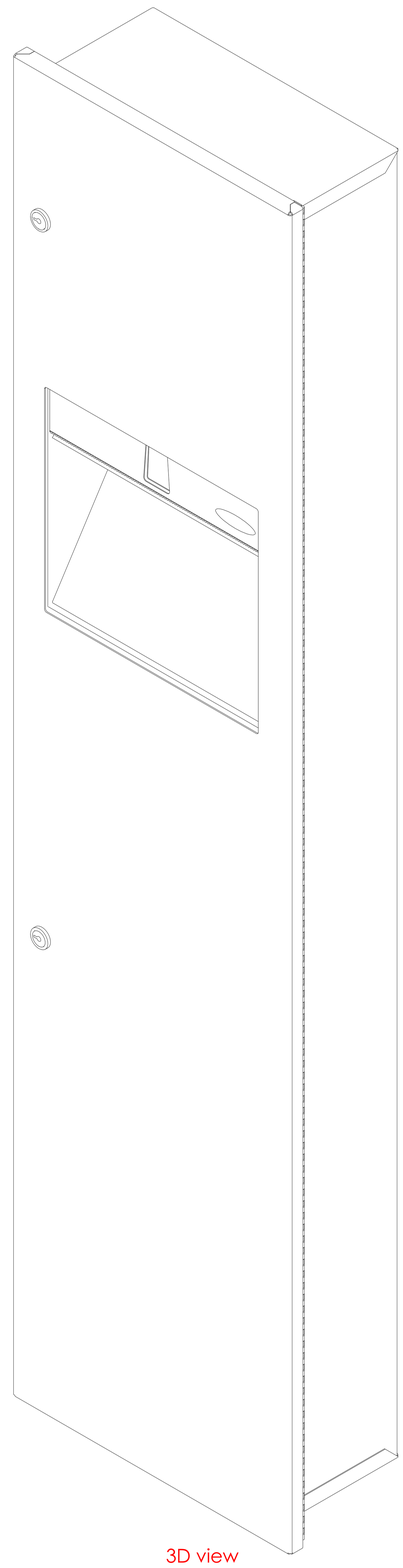

3D view
code 400A

5 3/8" Max. height of rough opening to floor for barrier free access

Floor

PROPRIETARY AND CONFIDENTIAL
THE INFORMATION CONTAINED IN THIS DRAWING IS THE SOLE PROPERTY OF FROST PRODUCTS LTD. ANY REPRODUCTION IN PART OR AS A WHOLE WITHOUT THE WRITTEN PERMISSION OF FROST PRODUCTS LTD. IS PROHIBITED.

FROST PRODUCTS LTD.
5280 JOHN LUCAS DRIVE, BURLINGTON, ON, L7L 5Z9

DATE: October 28, 2022	TITLE: 400 Dispenser Disposal	DWG NO. 400 - A-8-C CAD
DO NOT SCALE DRAWING		
UNLESS OTHERWISE SPECIFIED DIMENSIONS ARE IN INCHES.		SCALE: 1:1