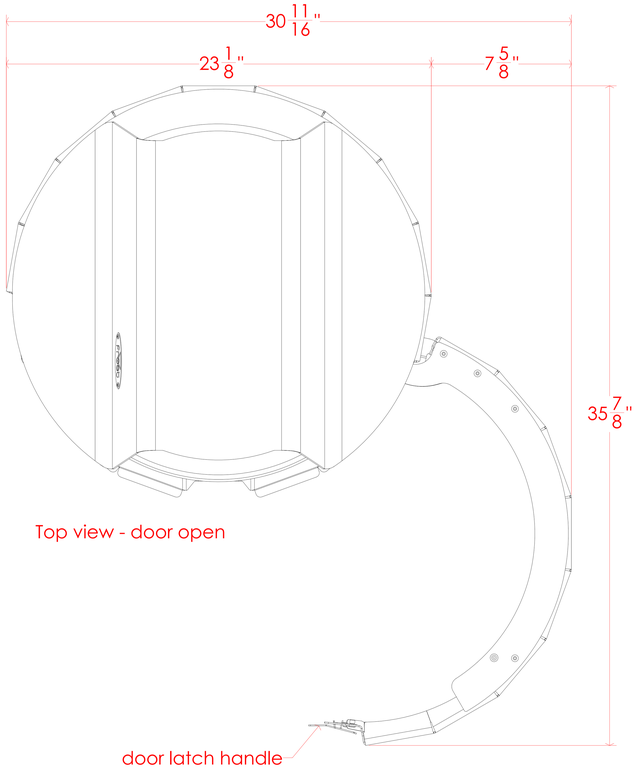

Top view - door open

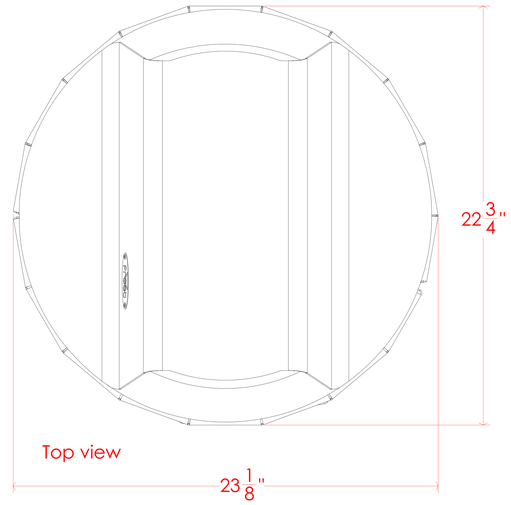

Top view

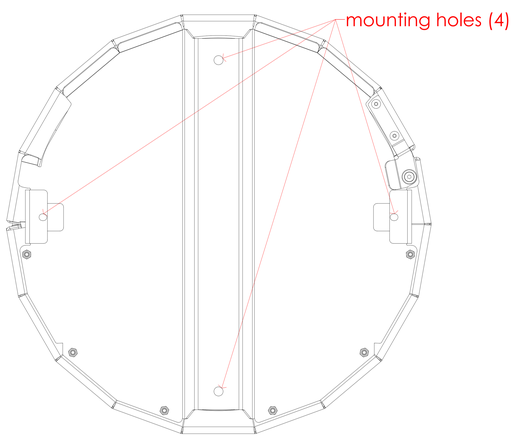

Bottom view

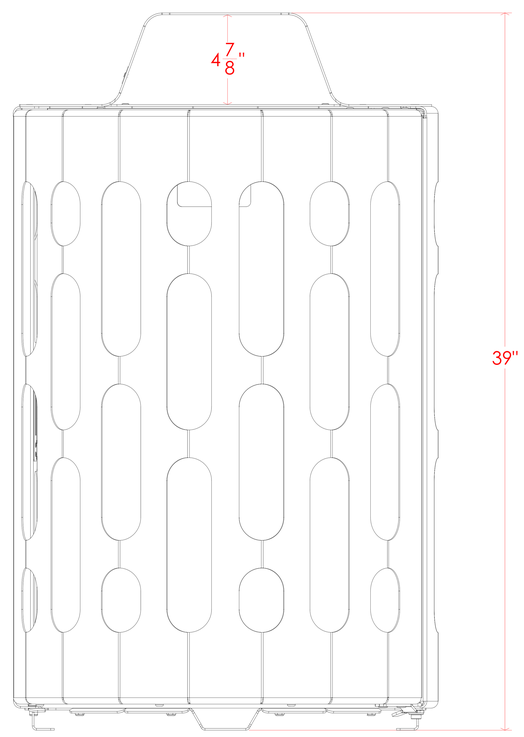

Front view

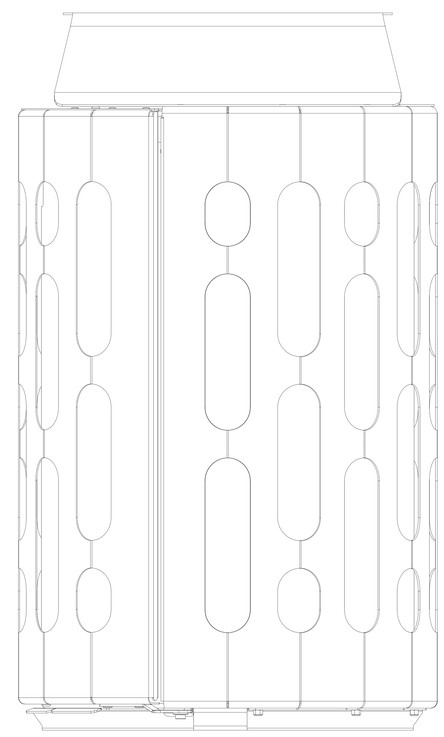

Side view

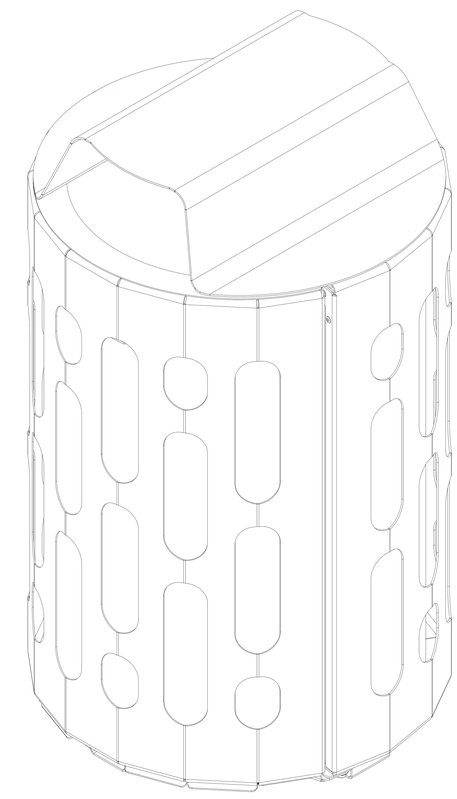

3D view

PROPRIETARY AND CONFIDENTIAL
THE INFORMATION CONTAINED IN THIS DRAWING IS THE SOLE PROPERTY OF FROST PRODUCTS LTD. ANY REPRODUCTION IN PART OR AS A WHOLE WITHOUT THE WRITTEN PERMISSION OF FROST PRODUCTS LTD. IS PROHIBITED.

FROST PRODUCTS LTD.
5280 JOHN LUCAS DRIVE, BURLINGTON, ON, L7L 5Z9

DATE: April 15, 2021	TITLE: Stingray Assembly	DWG NO. 2020-Stingray
DO NOT SCALE DRAWING		
UNLESS OTHERWISE SPECIFIED DIMENSIONS ARE IN INCHES.		SCALE: 1:1