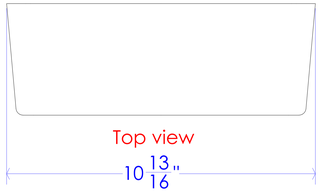

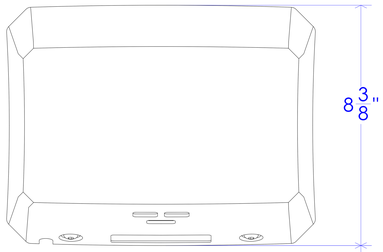

Front view

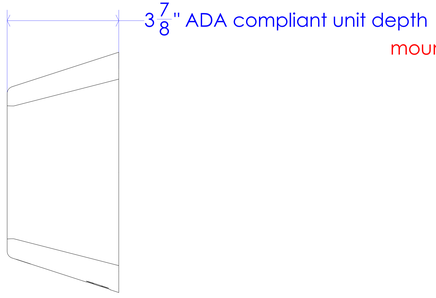

Side view

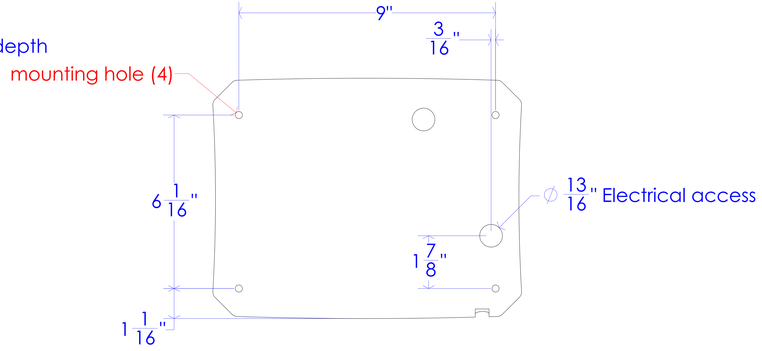

Back view

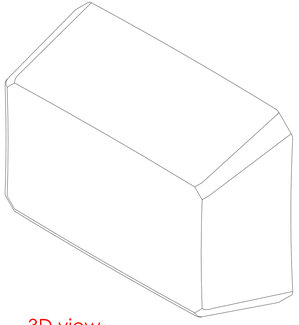

3D view
code 1194

48"[1220] Max height for barrier free installation

Floor

PROPRIETARY AND CONFIDENTIAL
THE INFORMATION CONTAINED IN THIS DRAWING IS THE SOLE PROPERTY OF FROST PRODUCTS LTD. ANY REPRODUCTION IN PART OR AS A WHOLE WITHOUT THE WRITTEN PERMISSION OF FROST PRODUCTS LTD. IS PROHIBITED.

FROST PRODUCTS LTD.
5280 JOHN LUCAS DRIVE, BURLINGTON, ON, L7L 5Z9

DATE: October 15, 2021	TITLE: 1194	DWG NO. 1194 CAD
DO NOT SCALE DRAWING		
UNLESS OTHERWISE SPECIFIED DIMENSIONS ARE IN INCHES.		SCALE: 1:1