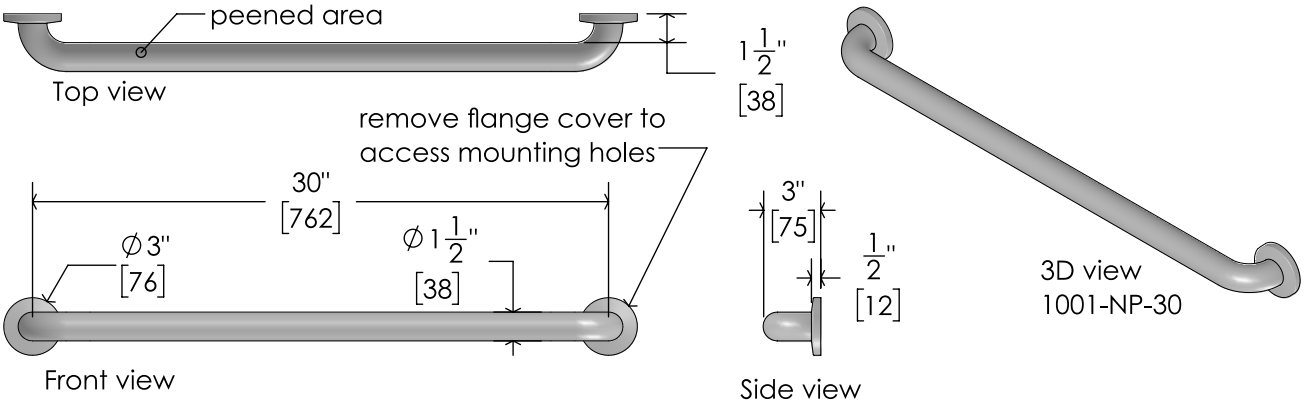
peened area
Top view
1 1/2"
[38]
remove flange cover to
access mounting holes
30"
[762]
∅3"
[76]
∅1 1/2"
[38]
Front view
3"
[75]
1/2"
[12]
Side view
3D view
1001-NP-30