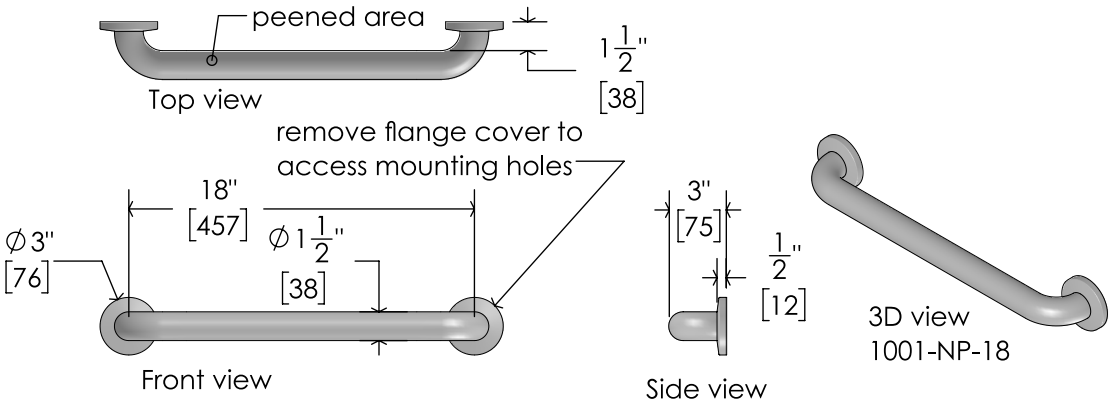
peened area
1 1/2"
[38]
Top view
remove flange cover to
access mounting holes
18"
[457]
∅3"
[76]
∅1 1/2"
[38]
Front view
3"
[75]
1/2"
[12]
Side view
3D view
1001-NP-18